Downloaded from ijeee.iust.ac.ir at 15:35 IRST on Sunday November 19th 2017

Observability-Enhanced PMU Placement Considering Conventional Measurements and Contingencies

M. Esmaili*(C.A.), K. Gharani** and H. A. Shayanfar**

Abstract: Phasor Measurement Units (PMUs) are in growing attention in recent power systems because of their paramount abilities in state estimation. PMUs are placed in existing power systems where there are already installed conventional measurements, which can be helpful if they are considered in PMU optimal placement. In this paper, a method is proposed for optimal placement of PMUs incorporating conventional measurements of zero injection buses and branch flow measurements using a permutation matrix. Furthermore, the effect of single branch outage and single PMU failure is included in the proposed method. When a branch with a flow measurement goes out, the network loses one observability path (the branch) and one conventional measurement (the flow measurement). The permutation matrix proposed here is able to model the outage of a branch equipped with a flow measurement or connected to a zero injection bus. Also, measurement redundancy, and consequently measurement reliability, is enhanced without increasing the number of PMUs; this implies a more efficient usage of PMUs than previous methods. The PMU placement problem is formulated as a mixed-integer linear programming that results in the global optimal solution. Results obtained from testing the proposed method on four well-known test systems in diverse situations confirm its efficiency.

Keywords: Measurement Redundancy, Observability, Phasor Measurement Unit, Power Flow Measurement, Zero Injection Bus.

1 Introduction

Since the advent of power systems, their monitoringand control have been performed by traditional Supervisory Control and Data Acquisition (SCADA) systems [1]. Although SCADA systems have been in use for a long time, they cannot fulfill all needs of recent interconnected power systems. In deregulated environments of electricity markets [2], each participant tries to make more profits and this trend leads power systems to be operated at the edge of their stability limits [3, 4]. The operation of such highly stressed power systems needs monitoring and control tools more efficient than SCADA systems. Recently, Phasor Measurement Units (PMUs) are introduced to overcome drawbacks of SCADA systems in modern power systems.A PMU installed on a bus is able to measure its own bus voltage as well as flows of branches connected to that bus depending on its number of channels. PMUs employ Synchronized Measurement Technology (SMT) to synchronize their measurement and provide time-synchronized phasors of voltage and current for Wide-Area Monitoring, Protection, and Control (WAMPAC) systems. The phasors are time-stamped and synchronized using Global Positioning Systems (GPSs) [5]. As a result, PMUs provide reliable monitoring, control, and protection for recent power systems [6].

A power system is said to be observable if voltage phasors of all buses are known. Since PMUs are rather expensive devices, it is not economical to install a PMU at each bus. Therefore, the optimal placement of PMUs is required to make the system entirely observable by exploiting the utmost potential of the least number of PMUs [7-10]. There are a few features that can be included in PMU placement. Firstly, in view of the fact that PMUs are not fully reliable devices [11] like every measuring equipment, a measurement redundancy should be considered, at least for more important buses, in order to mitigate the probable errors that may be associated with the operation of PMUs. Measurement redundancy implies that a bus is monitored through more

Iranian Journal of Electrical & Electronic Engineering, 2014.
Paper first received 6 Nov. 2013 and in revised form 20 June 2014.
* The Author is with the Department of Electrical Engineering, West Tehran Branch, Islamic Azad University, Tehran, Iran.
** The Authors are with the Centre of Excellence for Power System Automation and Operation, Iran University of Science and Technology, Tehran, Iran.
E-mails: msdesmaili@gmail.com, m_esmaili@wtiau.ac.ir, kiarashquf@yahoo.com and hashayanfar@gmail.com.

Downloaded from ijeee.iust.ac.ir at 15:35 IRST on Sunday November 19th 2017

than one path. Secondly, contingencies change power system topology and consequently they affect power system observability. Thus, the optimal PMU placement should be done in a way that the power system retains its observability after occurring credible contingencies. Next, some methods formulated the optimal PMU placement as a Mixed Integer Nonlinear Programming (MINLP) optimization problem, while some others formulated it as a Mixed Integer Linear Programming (MILP). It is worthwhile to note that MILP is more advantageous than MINLP. All MINLP can ensure is a locally optimal solution [12], while MILP problems can achieve the global optimal solution in a much less execution time. Finally, existing power systems have some conventional measurements already installed when new PMUs are being placed. Conventional measurements like flow measurements of branches and zero injection buses can be helpful in making observable their nearby buses. An efficient PMU placement should take the existing conventional measurements into consideration in order to reduce the number of required PMUs.

The optimal placement of PMUs is worked in literature from different point of views. In [13], a mixed-integer quadratic programming is proposed for optimal PMU placementwith measurement redundancy. The drawback is that the proposed formulation is a type of MINLP and not only it gives the local optimal solution but also it needs a long execution time especially in large-scale power systems. It is noted that although OPP is an offline problem, when its execution time is too long on small-scale test systems, it will definitely have problems in running on large-scale practical power systems with thousands of buses. In fact, it is almost impossible to run a non-linear OPP (such as MINLP) on a large-scale power system. In [14], a binary integer linear programming is proposed for optimal PMU placement. In order to include conventional measurements comprising power flow measurements and zero injection buses in PMU placement, the augmented bus merging technique is employed using a permutation matrix. However, measurement redundancy is not considered in the objective function and the effect of zero injection buses is not included in the times that a bus is observed. Also, the performance of the method is not evaluated in case of branch outages. Author in [15] used a linear integer programming where two permutation matrices are used in order to consider conventional measurements in optimal PMU placement. However, the effect of N-1 contingencies is not considered. In [11], a Mixed Integer Linear Programming (MILP) is proposed based on an auxiliary variable to apply zero injection buses effect to minimize the number of required PMUs for system observability. However, the effect of power flow measurements is not considered. In [16], a probabilistic multistage PMU placement methodology which utilizes MILP is proposed. Unlike the effect of zero injection buses, the effect of power flow measurements is not considered in this methodology.

In this paper, a MILP method is introduced in order to find the least number of required PMUs for system observability and their most suitable locations to maximize total measurement redundancy of the power system. Measurement redundancy means the number of times that a bus is observed by different PMUs more than once [17]. An inventive method is proposed to incorporate conventional measurements of branch flow measurements and zero injection buses into the redundant optimal PMU placement. Furthermore, the effect of single branch outage and single PMU failure is incorporated in the proposed method. When a branch with a flow measurement goes out, the network loses one observability path (the branch) and one conventional measurement (the flow measurement). Or, when a branch connected to a zero injection bus goes out, the other terminal bus loses its chance to be seen by zero injection bus property. The permutation matrix proposed here is able to model both cases mentioned above; this is not done in previous works, where merely the outage of branches is considered without any change to the set of flow measurements.

The remaining parts of this paper are organized as follows. In section 2, the formulation of the proposed method is represented. Then, the effect of conventional measurements is applied and the effect of contingencies is ultimately considered in formulation. The obtained results from simulations on test systems are shown in section 3 and section 4 concludes the paper.

2 The Proposed Optimal PMU Placement Formulation

The general objective function in optimal PMU placement is to minimize the number of required PMUs that make observable the entire power system. An individual bus is monitored either one time by a single PMU or a few times by different PMUs. It is noted that a PMU installed on a bus monitors its own bus as well as buses connected to that bus (by measuring the branch flow and calculating its voltage from branch parameters). Observing an individual bus more than one time means measurement redundancy, which is vital for power system state estimation [17]. Then, it is valuable if PMU optimal placement can increase measurement redundancy by more optimally locating PMUs without any additional PMU. This means a more efficient use of the same number of PMUs. Here, we introduce our objective function minimizing the number of PMUs and maximizing the measurement redundancy as:

$$\text{Minimize } OF = \sum_{i \epsilon SB} c_i x_i + \lambda \sum_{i \epsilon SB} s_i (u_i - f_i) \tag{1}$$

All variables and parameters are defined in the appendix. In Eq. (1), the first term minimizes the cost-weighted number of PMUs and the second term maximizes measurement redundancy. Since u_i is the

Downloaded from ijeee.iust.ac.ir at 15:35 IRST on Sunday November 19th 2017

upper limit of bus i observability and the minimization of $(u_i - f_i)$ leads to maximization of the measurement redundancy because of reducing the distance between the upper limit and actual observability times of bus i.c_i represents the relative cost of PMU installation at bus i and it allows to assign different costs for PMUs at different locations. The cost of a PMU is a function of its base cost (the unit without measurement channels) and its channels. A PMU located at a bus has one voltage channel to measure its host bus voltage and a few current channels to measure currents of branches connected to its host bus. For example, if a PMU is located at a bus with 5 branches, its cost is different from a PMU located at a bus with 3 branches. Then, the coefficient c_i should be adjusted for bus $i$considering the number of branches connected to bus$i$. In literature, there are some methods to assign c_i for buses. For instance in [14], the relative coefficient is considered as c_i= 1 for base PMU and it increases by 0.1 for each additional channel. On the other hand, s_i in Eq. (1) is the significance of bus i in measurement redundancy. It is noted that it is not economical to enhance measurement redundancy for all buses since it increases the number of PMUs. In order to choose which buses should be included in measurement redundancy, the coefficient of s_i can be selected unity for such buses and zero for other buses by the system planner.

In Eq. (1), f_i, as the observability times of bus i, is calculated as:

$$f_i = \sum_{j \epsilon SB} a_{ij} x_j \qquad \forall i \epsilon SB \tag{2}$$

In Eq. (2), λ is a weight coefficient used here to tune the weight of the second term in Eq. (2) so that it does not lead to increase the number of PMUs for measurement redundancy. For this purpose, the value of λshould be chosen carefully and it is defined here as:

$$\lambda = \left(\sum_{i \epsilon SB} s_i x_i \right)^{-1} \tag{3}$$

Constraints of the proposed PMU placement should make observable every bus in the power system. Without considering zero injection buses, flow measurements, and contingencies for now, the constraint is as:

$$f_i \geq 1 \qquad \forall i \epsilon SB \tag{4}$$

Constraint in Eq. (4) makes sure that each bus is monitored at least one time (directly by its own PMU or indirectly by PMUs of its adjacent buses). Note that this is applicable only to the base case (without branch outages or PMU failure) with no zero injection buses/flow measurements.

2.1 The Proposed Model for Inclusion of Conventional Measurements

We considered here two types of auxiliary observability source: zero injection buses and branch power flow measurements. We here use the concept of auxiliary observability source against the main observability source. That is, a PMU offers main observability sources (by its voltage or current channels). However, a zero injection bus or flow measurement provides observability that is dependent on PMU main observability. A zero injection bus is a bus with neither generation nor load. In a set of buses comprising a zero injection bus and buses connected to it, if all buses except one are observable, the unknown bus becomes observable [11] due to applying the KCL law. This property of zero injection buses can be helpful in PMU placement by saving some PMUs. On the other hand, power flow measurement on a branch, which measures active and reactive powers flowing through the branch, is also helpful in PMU placement. When one bus out of two terminals of a branch with flow measurement is observed by a PMU, the other terminal becomes observable by calculating its voltage phasor from the observed terminal voltage and known branch flows and parameters [18]. As a result, in case of a zero injection bus, PMUs do not have to observe the remaining one bus and in case of a branch flow measurement, PMUs do not have to observe the remaining terminal bus. These properties can reduce the number of total PMUs that are required to make the whole network observable.

Different methods are proposed in literature to model zero injection bus/flow measurements in OPP. In [14], an augmented bus merging method is proposed to model zero injection buses and flow measurements in PMU placement. However, this method is not proposed in a systematic way to include zero injection buses and flow measurements in PMU placement. Here, we refine the method of [14] in order to include both types of zero injection buses and flow measurements in optimal PMU placement using a permutation matrix denoted by$P$. The following procedure is proposed here to construct this matrix:

1) Initially, set Pequal to a $(n \times n)$ identity matrix where$n$ is the number of buses and assume that each row denotes a bus.
2) Divide buses into two groups: buses associated with zero injection buses or power flow measurements: SLPbuses and buses not associated with any conventional measurement ($SLNP$buses).
3) The rows of the identity matrix corresponding to buses not associated to any conventional measurement remain invariant.
4) For each zero injection bus, add the rows of the identity matrix corresponding to it and buses connected to it and form a new row which is called here the zero injection consolidated row. Replace primary rows corresponding to the zero injection bus and its connected buses with the new consolidated row.
5) For each branch flow measurement, add the rows of the identity matrix corresponding to its terminal buses and form a new row which is called here

Downloaded from ijeee.iust.ac.ir at 15:35 IRST on Sunday November 19th 2017

branch flow measurement consolidated row. Replace primary rows corresponding to terminal buses of the branch with the new consolidated row.

In order to considerthe conventional measurements intothe optimal PMU placement, Eq. (4) is replaced by:

$$\sum_{j\epsilon SB} P_{ij} f_j \geq b_i \qquad \forall i\epsilon SP \tag{5}$$

Entries of P_{ij} are constructed using the above mentioned procedure. The right hand side vector in Eq. (5) is calculated as follows:

$$b_i = \begin{cases} \sum_{j\epsilon SB} P_{ij} - 1 & \text{if row } i \text{ is a zero injection consolidated row} \\ 1 & \text{Otherwise} \end{cases} \tag{6}$$

It is noted that in case of no flow measurement/zero injection bus, constraint in Eq. (5) reduces to the well-known constraint of constraint in Eq. (4).

In order to more clarify, we apply the above mentioned algorithm to the IEEE 14-bus test system [19] shown in Fig. 1. In this test system, bus 7 is a zero injection bus and constitutes a zero injection group with its connected buses of 4, 8, and 9. Also, there are three flow measurements on branches 1-5, 6-11 and 9-10. Then, buses that are associated with conventional measurements are 1, 4, 5, 6, 7, 8, 9, 10, and 11. After applying the above mentioned procedure, the permutation matrix for this test system is obtained as follows:

$$P = \begin{bmatrix} 0&1&0&0&0&0&0&0&0&0&0&0&0&0 \\ 0&0&1&0&0&0&0&0&0&0&0&0&0&0 \\ 0&0&0&0&0&0&0&0&0&0&0&1&0&0 \\ 0&0&0&0&0&0&0&0&0&0&0&0&1&0 \\ 0&0&0&0&0&0&0&0&0&0&0&0&0&1 \\ 0&0&0&1&0&0&1&1&1&0&0&0&0&0 \\ 1&0&0&0&1&0&0&0&0&0&0&0&0&0 \\ 0&0&0&0&0&1&0&0&0&0&1&0&0&0 \\ 0&0&0&0&0&0&0&0&1&1&0&0&0&0 \end{bmatrix} \tag{7}$$

Substituting Eq. (7) in Eqs. (5) and (6) results in constraints (its first 5 rows) of $f_2 \geq 1$, $f_3 \geq 1$, $f_{12} \geq 1$, $f_{13} \geq 1$, and $f_{14} \geq 1$ for buses not associated with conventional measurements. This means that buses 2, 3, 12, 13, and 14 should be observed by PMUs at least one time. From row 6 of Eq. (7), the constraint $f_4 + f_7 + f_8 + f_9 \geq 3$ is yielded as a result of zero injection group comprising bus 7 and its connected buses of 4, 8, and 9. This means that it suffices that three buses out of the four buses in the zero injection group are observed by PMUs and the one remaining bus becomes observable through the zero injection property. Also, rows 7, 8, and 9 of Eq. (7) yield $f_1 + f_5 \geq 1$, $f_6 + f_{11} \geq 1$, and $f_9 + f_{10} \geq 1$ meaning that only one terminal bus of branches with flow measurement should be observed by PMUs and the remaining one becomes observable through flow measurement property. As a result, the proposed permutation matrix models both types of zero injection buses/flow measurements in the optimal PMU placement.

2.2 The Proposed Model for Single Branch Outage in the Presence of Zero Injection Buses and Flow Measurements

A power system should also retain its full observability under credible contingencies. A contingency changes the network topology, and consequently, the connectivity matrix of a in Eq. (2). Indeed, the outage of a branch makes an observability path of the network vanish and some buses may not be observed anymore. It is worthwhile to note that if we want to keep the network observable in both base case and post-contingency, more PMUs may be needed compared with just the base case. Then, only a limited number of credible contingencies are considered in the optimal PMU placement in order to keep the number of PMUs reasonable. Also, radial branches (branches connected to only two buses) are usually excluded from contingency analysis in PMU placement because their outage affects only the end-node bus a radial link [13]. This exclusion sounds sensible because the end-bus of a radial link becomes isolated from the rest of the network and it is impossible to observe it through other paths using other PMUs. If the outaged branch has a flow measurement, its outage leads to lose one of branch flow measurements and this can change the optimal PMU placement considering contingencies. It is noted that none of literature works like [13] and [11] has considered the loss of branch and its flow measurement; all of previous works studied contingencies assuming the same conventional measurements as the base case of the network. To be more clarified, we discuss single branch outages with and without zero injection buses/flow measurements as delineated below.

1) Network without zero injection buses/flow measurements: If there is no branch flow measurement in the network, the outage of a branch makes the

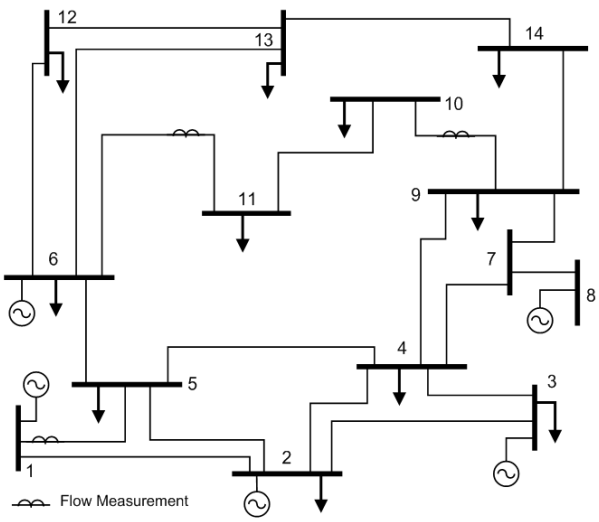

Fig. 1 One-line diagram of IEEE 14-bus test system with conventional measurements.

Downloaded from ijeee.iust.ac.ir at 15:35 IRST on Sunday November 19th 2017

network lose only an observation path. If branch i–j is removed from the network, the corresponding entries in the connectivity matrix change from $a_{ij} = a_{ji} = 1$ to $a_{ij} = a_{ji} = 0$. Then, it is enough to update a_{ij} in Eq. (2) as presented in previous works like [11]. If the post-contingency state after outage of an individual branch is denoted by k, we have to add a set of constraints, along with equations (2) and (4), in order to keep the network observable even after the outage of that branch. The following constraints should be added to the optimal PMU placement for post-contingency of branch k:

$$f_i^k = \sum_{j \epsilon SB} a_{ij}^k x_j \qquad \forall i \,\epsilon\, SB\,,\ \ \forall k \,\epsilon\, SL \tag{8}$$

$$f_i^k \geq 1 \qquad \forall i \,\epsilon\, SB\,,\ \ \forall k \,\epsilon\, SL \tag{9}$$

It is worthwhile to note that Eqs. (8) and (9) are only considered for a limited number of credible contingencies in practice. Otherwise, the number of PMUs that are required to retain the system observability in both base case and in all of post-contingency states will increase to uneconomical numbers.

2) Network with zero injection buses/flow measurements: If a branch, on which there is a flow measurement, is removed from the network, it affects both system topology and available conventional measurements. Then, not only the connectivity matrix should be updated (for the system topology change) but also the permutation matrix should be updated (for loss of one conventional measurement). If the branch is connected to a zero injection bus, its outage affects the consolidated row in the permutation matrix. For example, if the outage of branch 7-9 is considered in Fig. 1, it affects the consolidated row of zero injection bus in Eq. (7). In case of branch 7-9 outage, bus 9 is excluded from the consolidated row and the consolidated row becomes as [0,0,0,1,0,0,1,1,0,0,0,0,0,0]. Also, bus 9 is not anymore associated with conventional measurements after outage of branch 7-9, and consequently, a new row should be added to Eq. (7) as [0,0,0,0,0,0,0,0,1,0,0,0,0,0]. As a result, the outage of buses associated with zero injection buses changes the connectivity matrix as well as the permutation matrix.

On the other hand, the outage of a branch equipped with a flow measurement changes the connectivity matrix as well as the permutation matrix. For example, if the outage of branch 6-11 is considered in Fig. 1, the consolidated row of flow measurement 6-11 should be deleted from the permutation matrix since there is not anymore a flow measurement on branch 6-11. Instead, two new rows should be added to the Eq. (7) for buses 6 and 11 as [0,0,0,0,0,1,0,0,0,0,0,0,0,0] and [0,0,0,0,0,0,0,0,0,0,1,0,0,0] showing that buses 6 and 11 should be observed by PMUs without any assistance of conventional measurements. It is noted that this effect of branch outage on conventional measurements is not addressed in previous works.

Taking into account above explanations, in order to consider the outage of credible branches in the optimal PMU placement, if the branch is not associated with conventional measurements (zero injection bus/flow measurement), its outage affects only the connectivity matrix and is handled by Eqs. (8) and (9). However, if the branch is associated with conventional measurements, its outage affects both connectivity and permutation matrices. In this case, its outage should be handled by:

$$f_i^k = \sum_{j \epsilon SB} a_{ij}^k x_j \qquad \forall i \epsilon SB\,,\ \ \forall k \epsilon SPL \tag{10}$$

$$\sum_{j \epsilon SB} P_{ij}^k f_i^k \geq b_i^k \qquad \forall i \epsilon SP\,,\ \ \forall k \epsilon SPL \tag{11}$$

where P^k_{ij} denotes the permutation matrix after the outage of branch k and vector b^k_i is calculated in a way similar to Eq. (6). It should be noted that the permutation matrices as introduced in Eqs. (5) and (11) are parameters, not variables, of the optimization problem. This means that they do not increase the dimension of the optimization problem and the running time of the proposed method.

2.3 Considering Single PMU Failure

PMU, like other measuring equipment, is not a fully reliable device and may fail in its service period due to hardware or software reasons. So, it is necessary to consider PMU failure and to keep the power network observable in case of a single PMU loss. Up to the knowledge of the authors so far, in all literature works, the single PMU failure is studied just considering branch outage and without considering its flow measurement.

Without any conventional measurement, Eq. (4) should be so modified that each bus should be observed through at least two PMUs as done in previous works. In this case, after outage of a single PMU in the network, all buses are ensured to remain monitored by the other PMU. To do this, Eq. (4) is replaced by:

$$f_i \geq 2 \qquad \forall i \,\epsilon\, SB \tag{12}$$

On the other hand, the optimal PMU placement proposed here is able to ensure observability of the entire system in case of single PMU failure both in the absence and presence of conventional measurements. The permutation matrix in Eq. (5) includes bus observability constraints for both buses associated and not associated with conventional measurements as shown in the example of Eq. (7). To keep the system observable in case of single PMU failure with conventional measurements, Eq. (5) is replaced with the following constraint:

$$\sum_{j \epsilon SB} P_{ij} f_j \geq 2 \times b_i \qquad \forall i \epsilon SP \tag{13}$$

2.4 Considering Single PMU Loss or Single Branch Outage

The optimization problem of optimal PMU placement can be solved considering constraints of PMU

Downloaded from ijeee.iust.ac.ir at 15:35 IRST on Sunday November 19th 2017

failure and single branch outages simultaneously. Depending on whether or not zero injection buses/flow measurements are considered, the problem can be treated differently. In case of no zero injection buses/flow measurements, Eqs. (8) and (9) are added to the optimization problem for single branch outage and Eq. (12) is added for PMU failure. However, if conventional measurements are present, Eqs. (10) and (11) are added to the optimization problem for single branch outage and Eq. (13) is added for PMU failure. It is obvious that considering both PMU failure and single branch outage simultaneously more confines the solution space of the optimization problem, and consequently, it may result in a higher number of PMUs.

It is noted that in the absence of zero injection buses/flow measurements, it is sufficient to consider only single PMU loss without any need to considering single branch outage (if radial branches are excluded).It is because of the fact that each bus is observed at least from two paths as imposed by Eq. (12). In such a condition, all buses remain observed under a single contingency that takes away only one of observation paths.

3 Simulation Results

The proposed method is examined on IEEE 14-bus, 30-bus, 57-bus and 118-bus test systems [19] to evaluate its performance in diverse situations. The optimization code is implemented in the GAMS software package [20] and is solved using its CPLEX solver. In order to discern the impact of conventional measurements as the main attribute of the proposed method, results are presented with and without considering flow measurements in the following subsections.

3.1 Results without Considering Zero Injection Buses and Flow Measurements

The main purpose of this subsection is to investigate the effect of proposed measurement redundancy on the optimal PMU placement. In order to compare and validate the proposed method, its results are compared with results of [13] and [18] in Table 1.

Table 1 The number of PMUs and Total Times of observability obtained from the proposed and previous methods.

Test system	Ref [13]		Ref [18]		Proposed method	
	No. of PMUs	TTO	No. of PMUs	TTO	No. of PMUs	TTO
IEEE 14-bus	4	19	4	19	4	19
IEEE 30-bus	10	52	N/A	N/A	10	52
IEEE 57-bus	17	72	17	68	17	72
IEEE 118-bus	32	164	32	159	32	164

TTO: Total Times of Observability

As seen in Table 1, the number of PMUs is obtained from the proposed method as 4, 10, 17, and 32 for IEEE 14-bus, IEEE 30-bus, IEEE 57-bus, and IEEE 118-bus test systems, respectively. These results are in accordance with those of [13] and [18] as shown in the table. On the other hand, our proposed method has resulted in more observability than [18]. This means that the proposed method can use the same number of PMUs more efficiently for enhanced observability by locating them at more optimal places. That is, more measurement redundancy is provided by the proposed method. This happens because of the measurement redundancy term which we added to the objective function in Eq. (1).

After validation of the proposed method, results obtained from testing the proposed method on four test systems without flow measurements are represented in Table 2 for the base case. The proposed method is tested in this table with and without considering measurement redundancy- the second term in Eq. (1). In this table, column 2 shows PMU locations that are commonly selected by both methods of with and without considering measurement redundancy. Columns 3 and 4 give PMU locations that are selected individually by not considering and by considering measurement redundancy, respectively. As seen, when measurement redundancy is added to the objective function, it does not increase the total number of PMUs. However, it leads to a different placement of PMUs as seen in Table 2. Measurement redundancy does not impact the optimal PMU locations in the IEEE 14-bus test system since this is a small test system with limited choices for PMU locations. However, results differ in larger test systems as shown in Table 2. The different PMU placement with measurement redundancy results in a higher redundancy of bus observation.

Table 2 The effect of adding measurement redundancy on PMU optimal locations (no conventional measurement).

Test systems	PMU locations common between cases of with and without measurement redundancy term in Eq. (1)	Individual PMU locations without measurement redundancy term in Eq. (1)	Individual PMU locations with measurement redundancy term in Eq. (1)
IEEE 14-bus	2, 6, 7, 9	---	---
IEEE 30-bus	2, 6, 9, 10, 12, 15, 18, 25, 27	1	4
IEEE 57-bus	1, 6, 9, 15, 28, 32, 36, 41, 50, 53	19, 22, 25, 27, 45, 47, 57	4, 20, 24, 30, 38, 39, 46
IEEE 118-bus	5, 9, 12, 15, 17, 21, 40, 49, 53, 56, 62, 68, 71, 75, 77, 80, 85, 86, 90, 94, 102, 105, 110	1, 23, 28, 30, 35, 43, 47, 63, 115	3, 25, 29, 34, 37, 45, 64, 70, 114

Downloaded from ijeee.iust.ac.ir at 15:35 IRST on Sunday November 19th 2017

Table 3 Total Observability Times of test system buses with (without)* measurement redundancy.

Test system	Base case	PMU failure	Branch outage
IEEE 14-bus	19 (19)	27 (22)	39 (34)
IEEE 30-bus	52 (50)	59 (54)	85 (80)
IEEE 57-bus	72 (67)	96 (93)	130 (126)
IEEE 118-bus	164 (156)	230 (220)	309 (298)

*: Values inside parenthesis are TTOs without measurement redundancy

In order to compare the performance of the two methods with and without measurement redundancy, we here introduce the criterion of Total Times of Observation (TTO) which is defined as the sum of number of times that all buses are observed by PMUs. Indeed, TTO is $\sum f_i$ as f_i is given by Eqs. (2), (8), or (10) depending on the used features of the proposed method. A higher TTO indicates a higher measurement redundancy, and consequently, a better reliability. The TTO values for the examined test systems are shown in Table 3 for different situations of the base case, single PMU failure, and single branch outage. As seen in this table, embedding the measurement redundancy term in Eq. (1) leads to enhance TTO in all of the situations. For example, in the IEEE 118-bus test system, the proposed method improves TTO from 156 to 164 in the base case. It is possible to more increase TTO by using a higher λ in Eq. (1); however, it may increase the number of PMUs and make the method non-economical. In fact, the value of λ as defined by Eq. (2) is such a value that it does not increase the number of PMUs while the measurement redundancy term is added to Eq. (1). Selecting a higher λ can increase TTO at the cost of higher number of PMUs.

It is expected to increase the number of PMUs in case of considering PMU failure or single branch outage. In Table 4, the optimal number of PMUs required to maintain the system observable are shown for examined test systems. It is worthwhile to note that the number of PMUs is the same for cases with and without considering measurement redundancy. These results imply that the proposed method more efficiently employs the same number of PMUs by finding a better placement even in the scenarios of PMU loss and branch outage.

In order to do a sensitivity analysis, we here consider the variation of the objective function with respect to the main variable of the optimization problem, which is the binary variable of status of PMUs at buses. As we used GAMS software package to solve the proposed problem, it uses Lagrangian Relaxation to solve the problem. After solving the optimization problem, this software package gives the optimal value of the objective function as well as other valuable information about the problem including the marginal value of variables. Marginal value of a variable in optimization is defined as the sensitivity of the objective function with respect to that variable. If we want to obtain the sensitivity of the objective function OF with respect to x_i, i.e. $\Delta OF/\Delta x_i$, it is enough to take marginal values of x_i after solving the problem. We here discuss the marginal values in cases of with and without measurement redundancy term (the second part) in Eq. (1).

Considering the uniform coefficients of c_i =1 without measurement redundancy, the objective function of Eq. (1) turns into the simple one: $OF = \sum x_i$. In this case, it is evident that we get one unit increment in the objective function by increasing x_i by one unit. That is, all marginal values of x_i variables are equal to unity.

On the other hand, if we consider measurement redundancy with uniform coefficients of c_i =1 in Eq. (1), the objective function turns into $OF = \sum x_i + \lambda \sum s_i(u_i - f_i)$. In this equation, s_i and u_i are parameters that are assumed constant during optimization. However, f_i is a variable and a function of x_i as given in Eq. (2). If we increase the value of x_i by one unit, this will increase the first part of Eq. (1) by one unit like the case without measurement redundancy. However, this will also increase f_i in Eq. (2), which in turn, decrease the objective function in Eq. (1) because of the negative sign of f_i in Eq. (1). Then, it is expected that the sensitivity of the objective function with respect to x_i be less than unity. In order to numerically confirm this, it is run on the IEEE 118-bus test system as the largest test system of the paper and results are depicted in Fig. 2. As seen in this figure, all marginal values are less than unity and some of them are higher than others. It implies that installing PMU at buses 10, 73, 87, 111, 112, 116, and 117 results in the highest variation in the objective function with the sensitivity of 0.9958.

Table 4 Optimal number of PMUs (no conventional measurement).

Test systems	Base case	PMU loss	Branch outage
IEEE 14-bus	4	9	6
IEEE 30-bus	10	21	14
IEEE 57-bus	17	33	24
IEEE 118-bus	32	68	47

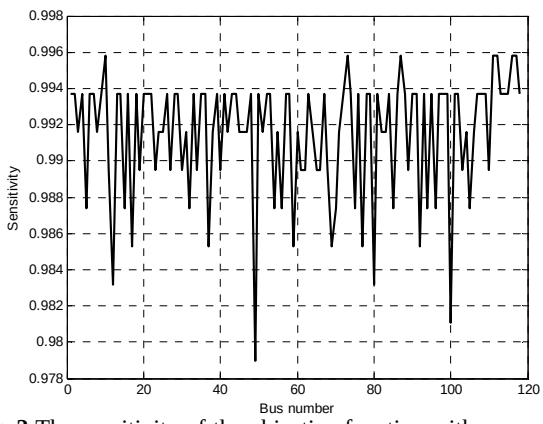

Fig. 2 The sensitivity of the objective function with respect to the status of PMU at buses in IEEE 118-bus test system.

Downloaded from ijeee.iust.ac.ir at 15:35 IRST on Sunday November 19th 2017

3.2 Results with Considering Zero Injection Buses/Flow Measurements

As previously mentioned in subsection 2.1, adding conventional measurements may decrease the number of PMUs required for system observability. Here, we considered zero injection buses and branch flow measurements for the examined test systems as shown in Table 5. It is noted that the selected zero injection buses are the same as considered in [14].

The optimal locations of PMUs in the presence of zero injection buses/flow measurements are shown in Table 6 for the test systems. As seen and expected, the number of required PMUs reduces when conventional measurements are introduced into test systems. For example, the IEEE 30-bus test system needs 10 PMUs in the base case (see Table 4) to make the whole system observable, while it needs 6 PMUs as seen in Table 6 in case of having conventional measurements. Of course, the reduction depends on the number and positions of zero injection buses/flow measurements.

The number and locations of required PMUs for observability of the IEEE 14-bus test system are shown in Table 7 under different scenarios for a more detailed analysis. Compared with Table 4, it is seen that the presence of conventional measurements causes to reduce the number of required PMUs. As seen in Table 7, more PMUs are needed to keep the system observable if PMU loss or single branch outage is considered.

Table 5 Conventional measurements assumed for the test systems.

Test systems	Zero injection buses	Branches with power flow measurement
IEEE 14-bus	7	1-5, 6-11, 9-10
IEEE 30-bus	8, 9, 11, 25, 28	1-3, 3-4, 5-7, 6-7
IEEE 57-bus	4, 7, 11, 21, 22, 24, 26, 34, 36, 37, 39, 40, 45, 46, 48	14-15, 15-45, 18-19, 21-22, 22-38, 24-26, 28-29, 30-31, 34-35, 36-40, 39-57, 47-48, 50-51, 53-54
IEEE 118-bus	5, 9, 30, 38, 63, 64, 68, 71, 81, 100	1-2, 20-21, 21-22, 41-42, 43-44, 46-48, 52-53, 53-54, 86-87, 17-113

Table 6 PMU optimal locations in the presence of conventional measurements by considering measurement redundancy.

Test system	The number & optimal location of PMUs
IEEE 14-bus	2 (at buses 4 and 13)
IEEE 30-bus	6 (at buses 2, 10, 12, 18, 24, 27)
IEEE 57-bus	11 (at buses 6, 12, 13, 15, 20, 24, 31, 36, 49, 52, 56)
IEEE 118-bus	25 (at buses 8, 11, 12, 19, 23, 27, 31, 32, 34, 37, 49, 54, 56, 59, 62, 70, 75, 77, 80, 85, 89, 92, 96, 105, 110)

Table 7 PMU optimal locations of the IEEE 14-bus test system in the presence of conventional measurements and considering measurement redundancy in different situations.

Scenario	The number and location of PMUs
Base case	2 (at buses 4, 13)
Single branch outage	5 (at buses 2, 4, 10, 12, 14)
Single PMU loss	5 (at buses 2, 4, 6, 9, 13)
Single branch outage or single PMU loss	6 (at buses 2, 4, 6, 9, 10, 13)

As seen in Table 7, two PMUs at buses 4 and 13 are determined by the proposed method to make observable the network in the base case. By taking into account Fig. 1, the PMU at bus 4 makes observable bus 4 and its connected buses of 2, 3, 5, 7, and 9. Also, the PMU at bus 13 makes observable bus 13 as well as its connected buses of 6, 12, and 14. In the zero injection group of bus 7 including buses 4, 7, 8, and 9, the remaining bus 8 becomes observable because of the zero injection property. Also, bus 10 becomes observable because of bus 9 observability and flow measurement on 9-10. In addition, bus 11 becomes observable due to the observability of bus 6 and flow measurement on 6-11. Consequently, the two PMUs at buses 4 and 13 make the whole system observable.

Furthermore, in case of single PMU loss in Table 7, 5 PMUs at buses 2, 4, 6, 9 and 13 ensures that each bus is redundantly observed according to Eq. (13). For example, one of observability paths of bus 10 is provided by the PMU at bus 9 and the second observability is provided by the PMU at bus 4 (making bus 9 observable and consequently bus 10 observable through flow measurement of 9-10). Then, bus 10 has a redundant observability and remains observable in case of a single PMU failure. However, if the single branch outage or PMU loss is considered (as the last row of Table 7), the outage of branch 9-10 makes the system lose the flow measurement 9-10 and then, the second observability of bus 10 is not provided anymore. Then, the optimization problem places another PMU at bus 10 to provide the redundant observability. This situation can also be said for bus 11 where the outage of branch 6-11 with its flow measurement makes its redundant observability vanish. As seen from these examples, the proposed formulation for the permutation matrix is able to incorporate the outage of a branch with its flow measurement into the optimal PMU placement, a matter that is not addressed in previous works.

4 Conclusions

In this paper, a novel method is proposed for inclusion of conventional measurements comprising zero injection buses and branch flow measurements in the optimal PMU placement. A systematic method is presented to incorporate zero injection buses/flow measurements in the optimal PMU placement using a

Downloaded from ijeee.iust.ac.ir at 15:35 IRST on Sunday November 19th 2017

permutation matrix. The optimization problem is formulated as a mixed-integer linear programming. The proposed method also enhances measurement redundancy in bus observability by adding a proper term to the objective function without increasing the number of PMUs. This means that the proposed method exploits the same number of PMUs more efficiently than the previous optimal placement methods. In addition, the proposed method is formulated to make the system observable in case of PMU failure or branch outages with flow measurements. The results obtained from testing the proposed method on four IEEE test systems confirm its efficiency under different scenarios.

Appendix

The nomenclature used in this paper is as follows.

SB	Set of buses
SP	Set of permutation matrix rows
SL	Set of credible contingencies of branches
SLNP	Set of credible branches without conventional measurements
SLP	Set of credible branches with conventional measurements
n	Number of buses
m	Number of permutation matrix rows
nc	Number of buses correlated with conventionalmeasurements
nz	Number of zero injection buses
np	Number of power flow measurements
c_i	Relative cost of PMU implementation at bus i
s_i	Significance of bus i in redundant observability
u_i	Upper limit of times that bus i can be observed
λ	Normalizing coefficient for redundant observability term
a_{ij}	Connectivity matrix elements: $a_{ij} = 1$ if buses i and j are connected or if $i = j$; otherwise $a_{ij} = 0$
P	Permutation matrix
b_i	Right-hand side of the observability constraint
a^k_{ij}	Connectivity matrix elements after outage of branch k
P^k_{ij}	Permutation matrix without branch k
b^k_i	Right-hand side of conventional measurement constraint after outage of branch k
x_i	Binary variable: $x_i = 1$ if a PMU is placed at bus i, otherwise $x_i = 0$
f_i	Observability times of bus i
f^k_i	Observability times of bus i after outage of branch k

References

[1] R. Diao, S. Kai, V. Vittal, R. J. O'Keefe, M. R. Richardson, N. Bhatt, D. Stradford, and S. K. Sarawgi, "Decision tree-based online voltage security assessment using PMU measurements", *IEEE Transactions on Power Systems,*Vol. 24, No. 2, pp. 832-839, 2009.

[2] M. Heydaripour and A. A. Foroud, "A New Framework for Congestion Management with Exact Modeling of Impacting Factors", *Iranian Journal of Electrical and Electronic Engineering,*Vol. 8, No. 4, pp. 329-340, 2012.

[3] J. Aghaei and N. Amjady, "A scenario-based multiobjective operation of electricity markets enhancing transient stability", *International Journal of Electrical Power & Energy Systems,* Vol. 35, No. 1, pp. 112-122, 2012.

[4] R. Ghazi, N. Pariz and R. Zeinali, "Nonlinear Analysis of Interaction with SVC in Stressed power systems: Effect of SVC Controller Parameters", *Iranian Journal of Electrical and Electronic Engineering,*Vol. 9, No. 2, pp. 107-116, 2013.

[5] R. F. Nuqui and A. G. Phadke, "Phasor measurement unit placement techniques for complete and incomplete observability", *IEEE Transactions on Power Delivery,*Vol. 20, No. 4, pp. 2381-2388, 2005.

[6] Y. Damchi and J. Sadeh, "Effect of Remote Back-Up Protection System Failure on the Optimum Routine Test Time Interval of Power System Protection", *Iranian Journal of Electrical and Electronic Engineering,* Vol. 9, No. 4, pp. 237-245, 2013.

[7] A. Abur and A. G. Exposito, *Power System State Estimation: Theory and Implementation,* New York: Mercel Dekker, 2004.

[8] M. Shahidehpour, H. Yamin and Z. Li, *Market Operations in Electric Power Systems*, New York: John Wiley & Sons Ltd, 2002.

[9] C. Rakpenthai, S. Premrudeepreechacharn, S. Uatrongjit and N. R. Watson, "An optimal PMU placement method against measurement loss and branch outage", *IEEE Transactions on Power Delivery,* Vol. 22, No. 1, pp. 101-107, 2007.

[10] M. Mosavi and A. Akhyani, "PMU Placement Methods in Power Systems based on Evolutionary Algorithms and GPS Receiver", *Iranian Journal of Electrical and Electronic Engineering,* Vol. 9, No. 2, pp. 76-87, 2013.

[11] F. Aminifar, A. Khodaei, M. Fotuhi-Firuzabad and M. Shahidehpour, "Contingency-constrained PMU placement in power networks", *IEEE Transactions on Power Systems,* Vol. 25, No. 1, pp. 516-523, 2010.

[12] D. G. Luenberger and Y. Ye, *Linear and Nonlinear Programming,* Springer, 2008.

[13] S. Chakrabarti, E. Kyriakides and D. G. Eliades, "Placement of synchronized measurements for power system observability", *IEEE Transactions on Power Delivery,* Vol. 24, No. 1, pp. 12-19, 2009.

[14] N. H. Abbasy and H. M. Ismail, "A Unified Approach for the Optimal PMU Location for Power System State Estimation", *IEEE Transactions on Power Systems,* Vol. 24, No. 2, pp. 806-813, 2009.

Downloaded from ijeee.iust.ac.ir at 15:35 IRST on Sunday November 19th 2017

[15] G. Bei, "Generalized integer linear programming formulation for optimal PMU placement", *IEEE Transactions on Power Systems,* Vol. 23, No. 3, pp. 1099-1104, 2008.

[16] F. Aminifar, M. Fotuhi-Firuzabad, M. Shahidehpour and A. Khodaei, "Probabilistic multistage PMU placement in electric power systems", *IEEE Transactions on Power Delivery,* Vol. 26, No. 2, pp. 841-849, 2011.

[17] J. B. A. London, S. A. R. Piereti, R. A. S. Benedito and N. G. Bretas, "Redundancy and observability analysis of conventional and PMU measurements", *IEEE Transactions on Power Systems,* Vol. 24, No. 3, pp. 1629-1630, 2009.

[18] R. Kavasseri and S. K. Srinivasan, "Joint Placement of Phasor and Power Flow Measurements for Observability of Power Systems", *IEEE Transactions on Power Systems,* Vol. 26, No. 4, pp. 1929-1936, 2011.

[19] R. D. Zimmerman and C. E. Murillo-Sanchez, *MatPower Software Package User Guide,* USA: University of Cornell, 2013.

[20] R. E. Rosenthal, *General Algebraic Modeling System (GAMS) User Guide,* Washington, DC, USA: GAMS Development Corporation, 2013.

Masoud Esmaili was born in Sarab, Iran, in 1972. He received his Ph.D. in Electrical Engineering from University of Science & Technology in 2010. Since then, he has been working in the field of power system studies. His publications include more than 20 papers in international journal as well as about 15 conference papers. His research area includes power system related topics particularly smart grids, electricity markets, and distribution systems.

Kiarash Gharani received his B.Sc. degree in electrical engineering from Islamic Azad University, South Tehran Branch, Iran in 2010 and his M.Sc. degree in electrical engineering from Iran University of Science and Technology, Tehran, Iran, in 2012. His research interests focus on power system studies especially power system protection.

Heidar Ali Shayanfar received the B.Sc. and M.Sc. degrees in Electrical Engineering in 1973 and 1979, respectively. He received his Ph.D. degree in Electrical Engineering from Michigan State University, USA, in 1981. Currently, he is a full professor in Electrical Engineering Department of Iran University of Science and Technology, Tehran, Iran. His research interests are in the application of artificial intelligence to power system control design, dynamic load modeling, power system observability studies, power quality, and voltage collapse. He is a member of Iranian Association of Electrical and Electronic Engineers and IEEE.